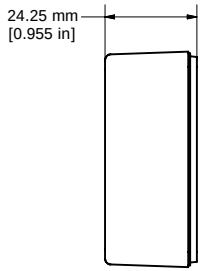

SIDE VIEW OF BOX

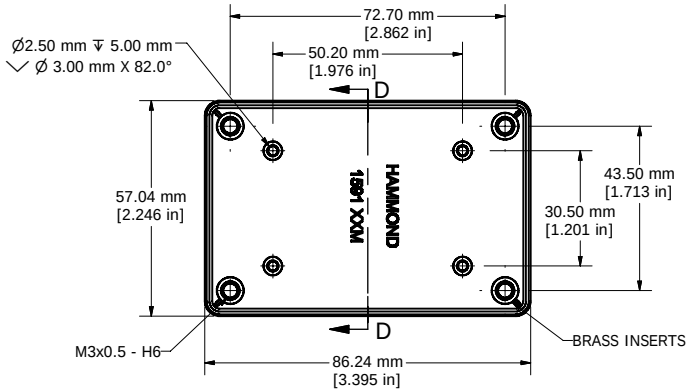

TOP VIEW OF BOX

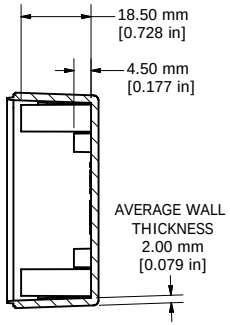

SECTION D-D

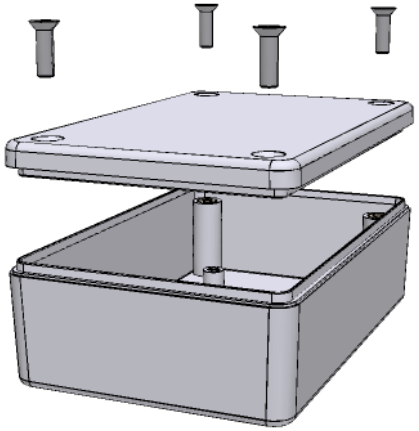

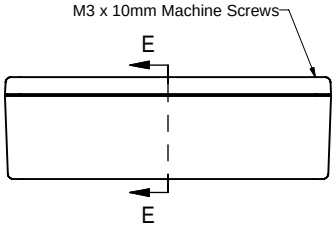

SIDE VIEW OF ENCLOSURE

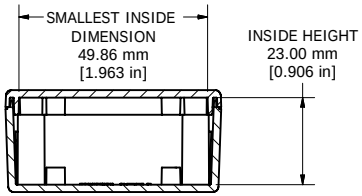

SECTION E-E

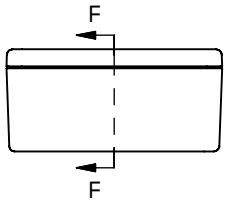

END VIEW OF ENCLOSURE

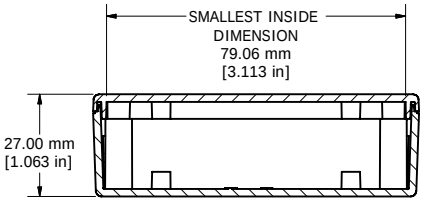

SECTION F-F

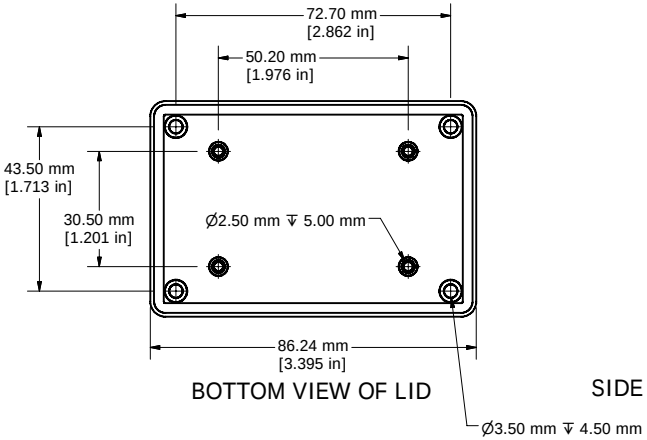

BOTTOM VIEW OF LID

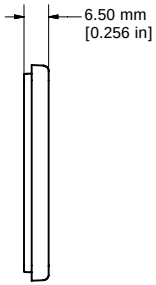

SIDE VIEW OF LID

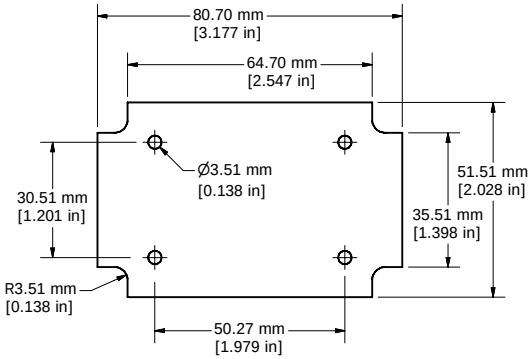

MAX PC BOARD SIZE (NOT INCLUDED)

Enclosures can be Factory Modified (Milling, Drilling, Printing etc.)
Solid models of this enclosure available in STEP or IGES.
Contact Factory mjm@hammondmfg.com

NOTE	
Enclosure molded from FRABS UL 94-V0 Plastic.	
Brass Inserts Included	
Other materials / colours available consult factory.	
1591XXM	
1591XXM Box Enclosure	
Black Enclosure - RAL 7011	1591XXMBK
Gray Enclosure - RAL 7002	1591XXMGY
ACCESSORIES	
Lid Screws M3 x 0.5 - H6 Black	1591MS100BK (Pkg 100)
Lid Screws M3 x 0.5 - H6 Standard	1591MS100 (Pkg 100)
P.C. Board Screws (All Boxes)	
P.C. Board Screws	1593ATS50 (Pkg 50)
[#4 x 1/4" self-tapping (6.4mm)]	1593ATS100 (Pkg 100)

HAMMOND MANUFACTURING™

1591XXM

www.hammondmfg.com